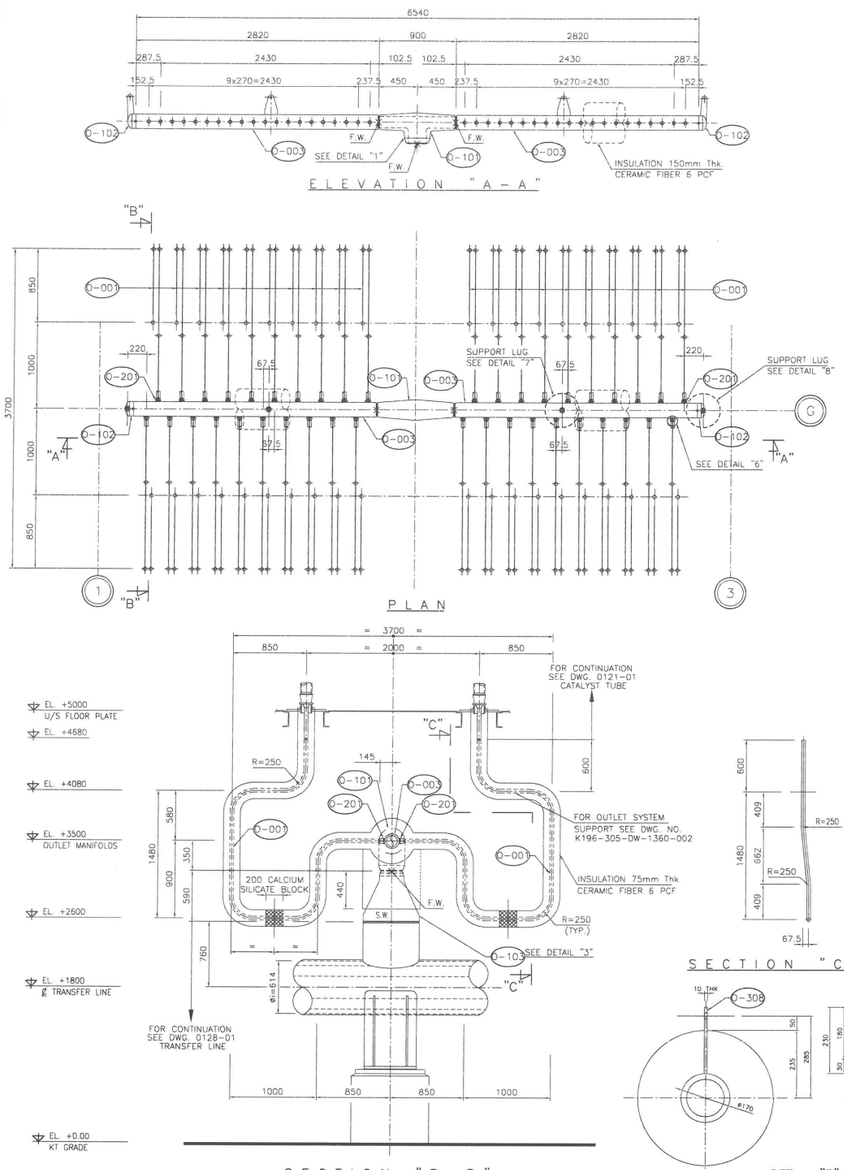

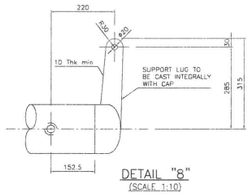

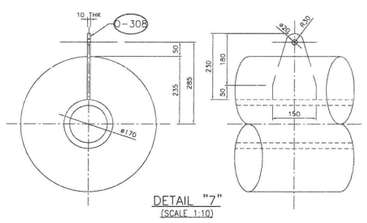

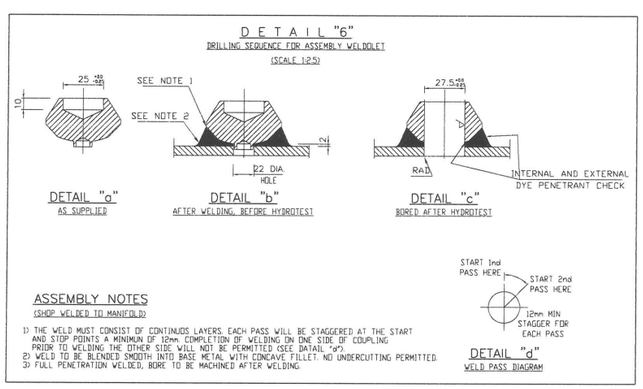

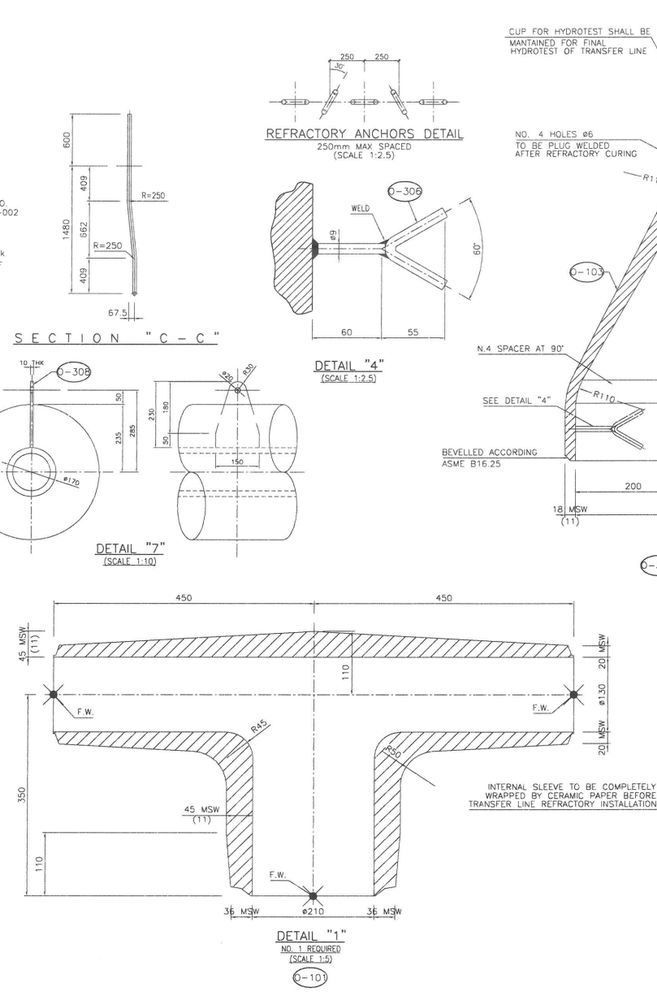

GENERAL NOTE

1 - DESIGN, CONSTRUCTION, INSPECTION AND TESTING ACC. TO THE PERTINENT MR. K196-305-MR-0121-001 AND APPLICABLE CODES. IN CASE OF CONTRADICTION BETWEEN BILL OF MATERIAL AND DRAWINGS, THE DRAWING SHALL GOVERN AND KT SHALL DIRECTLY BE INFORMED.
2 - WELD PREPARATION TO CONFORM TO ASME B16.25/31.3 & WPS-WPR-POR ACCORDING TO APPLICABLE RULES OF CODE & ASME SEC1. IX
3 - ⊠ = F.W. = FIELD WELD / ● = S.W. = SHOP WELD
4 - ALL DIMENSIONS ARE IN mm. EXCEPT OTHERWISE INDICATED
5 - ALL THE ELEVATIONS ARE REFERRED TO THE HIGHEST PAVING POINT (HPP) +0.00
6 - TO BE TESTED TOGETHER WITH CONVECTION COIL 305-CC02, INLET SYSTEM, CATALYST TUBE, OUTLET SYSTEM, TRANSFERLINE & PGB
7 - HALF SUB-HEADER ASSEMBLIES AND TEE-PIECE TO BE SUPPLIED SHOP TESTED
8 - FOR NOT RADIOGRAPHABLE JOINTS OR WHERE X-RAY EXAMINATION IS DIFFICULT TO INTERPRET, ULTRASONIC OR DYE PENETRANT TEST MAY BE SUBSTITUTED.
9 - WELDOLETS BRANCH SIDE SHALL BE FORGED BLIND. THE TUBE PREFABRICATOR MUST DRILL WELDOLETS AFTER EXECUTION OF HYDROTEST. TUBE SHALL BE PREDRILLED BEFORE HYDROTEST (i.e. ø=6 mm HOLE). HYDROTEST TO BE IN ACCORDANCE WITH PED.
10 - WATER USED FOR HYDROTEST SHALL HAVE LESS THAN 25ppm CHLORIDES. ALL ITEMS SHALL BE CAREFULLY FLUSHED TO REMOVE ANY FOREIGN MATERIAL AND DRIED.
11 - THICKNESS MUST BE CALCULATED BY VENDOR ON THE BASE OF SPECIFIED DESIGN CONDITIONS
12 - MIN. THK AT EXTRADOS AFTER BENDING = 8,75mm / MIN. THK. AT INTRADOS AFTER BENDING = 9,25mm.
13 - U.S. = UNDER STEEL ELEVATION.
14 - T.O.S. = TOP STEEL ELEVATION.
15 - LIQUID PENETRANT EXAMINATION IS REQUIRED FOR: 100% BEVEL BEFORE WELDING 100% ROOT & 100% FINAL WELD PASS. EXAMINATION SHALL BE IN ACCORDANCE WITH ASME SECTION VIII DIV. 1 LAST EDITION.
16 - THE ROOT-FINAL WELD PASS SHALL BE BOTH DYE PENETRANT INSPECTED. 100% WELDOLET WELDS HAVE TO BE DYE-PENETRANT INSPECTED EACH WELD PASS FROM ROOT PASS UP TO FINAL PASS
17 - ALL WELDS SHALL BE FULL PENETRATION (FOR PRESSURE RETAINING PARTS)
18 - ALL BUTT WELDS SHALL BE 100% RADIOGRAPHED
19 - WPS, POR, AND WELDER QUALIFICATION SHALL BE IN ACCORDANCE WITH ASME IX LAST EDITION.
20 - THE INSIDE SURFACE OF CAST TUBES AND FITTINGS SHALL BE Ra 3,2micron OR BETTER.
21 - TUBE WALL THICKNESS TO BE CALCULATED BY KT AND VERIFIED BY SUPPLIER ON THE BASE OF SPECIFIED DESIGN CONDITIONS.
22 - DELETED
23 - INSULATION TO BE INSTALLED AFTER PNEUMATIC TEST EXECUTION.
24 - SMALL/LARGE END OF CONE O-103 TO BE DESIGNED FOR 890°C / 300°C INTERMEDIATE DESIGN TEMPERATURES MAY BE STATED BY INTERPOLATION.

INSULATION QUANTITY

INSULATION (75mm THK.)	m^3	7.5
INSULATION (150mm THK.)	m^3	2.0
EXTERNAL SHEET: THK. 0.45 mm (MAT.: ALLUMINIUM SHEET)	m^2	193.0

NOTES FOR CENTRICAST AND STATICALLY FABRICATION

NOTES FOR OUTLET MANIFOLD (CENTRICAST):

1) MACHINE ALL SURFACES TO A FINISH OF 6.3 µm RA (250 µin. RA PER ASME B46.1) MINIMUM, THUS INCREASING THE EFFECTIVENESS OF SURFACE EXAMINATION.
2) EXAMINE ALL SURFACES OF EACH CASTING BY THE LIQUID PENETRANT METHOD, IN ACCORDANCE WITH ASTM E 165. JUDGE ACCEPTABILITY OF FLAWS AND WELD REPAIRS IN ACCORDANCE WITH TABLE 1 OF MSS SP-53, USING ASTM E 125 AS A REFERENCE FOR SURFACE FLAWS.

NOTES FOR OUTLET TEE AND CONE (IF STATICALLY CAST):

1) EXAMINE ALL SURFACES OF EACH CASTING BY THE LIQUID PENETRANT METHOD, IN ACCORDANCE WITH ASTM E 165. JUDGE ACCEPTABILITY OF FLAWS AND WELD REPAIRS IN ACCORDANCE WITH TABLE 1 OF MSS SP-53, USING ASTM E 125 AS A REFERENCE FOR SURFACE FLAWS.
2) FULLY RADIOGRAPH EACH CASTING IN ACCORDANCE WITH ASTM E 142. JUDGE IN ACCORDANCE WITH THE ACCEPTANCE LEVELS 1 FOR THK < 25mm OR 2 FOR THK >= 25 AND < 51mm AS FOR STANDARD ASTM E446, ACCEPTABLE DISCONTINUITIES TYPES A,B,C. JUDGE IN ACCORDANCE WITH THE ACCEPTANCE LEVELS 2 FOR THK >= 51mm AS FOR STANDARD ASTM E186, ACCEPTABLE DISCONTINUITIES CATEGORIES A,B,C.

TUBES

M.T.O. N° K196-305-MTO-0121-002 SH.3
KT DWG. N° K196-305-DW-0121-002

REV.	POS.N	QTY	DESCRIPTION	LENGTH	EXTRA LENGTH	TOTAL LENGTH	MATERIAL	REMARKS
C	O-001	40+2	PIPE ø=27.5 (MIN.) 9mm M.S.W. (22) ø=45.5	5000	230	5230	B407 UNS N08811	Alloy 800HT (12)
C	O-002	–	DELETED	–	–	–	–	–
B	O-003	2	CENTRICAST PIPE ø=130 (MIN.) 20mm MSW	2820	150	2970	20 Cr 32 Ni-Nb	(21)

FITTINGS (BENDS,ELBOWS,CAPS,REDUCTIONS,TEES)

M.T.O. N° K196-305-MTO-0121-002 SH.4
KT DWG. N° K196-305-DW-0121-002

REV.	POS.N	QTY	DESCRIPTION	MATERIAL	REMARKS
A	O-101	1	TEE ø=130 x ø=210 LENGTH= 900	20 Cr 32 Ni-Nb	(11)
B	O-102	2	CAP ø=130 20mm MSW WITH SUPPORT LUG	20 Cr 32 Ni-Nb	(11)
A	O-103	1	REDUCTION ø=210 x ø=614	20 Cr 32 Ni-Nb	SEE DETAIL "3" (11)

FORGED FITTINGS (FLANGES,WELDOLETS,ELBOLETS,ETC.)

M.T.O. N° K196-305-MTO-0121-002 SH.5
KT DWG. N° K196-305-DW-0121-002

REV.	POS.N	QTY	DESCRIPTION	MATERIAL	REMARKS
B	O-201	40	WELDOLET ø170 20mm MSW x ø45.5 9mm MSW (FULL COMPENSATION)	UNS N08811	(d) (e) (f)
B	–	–	DELETED	–	–

MISCELLANEOUS (GASKETS,STUD BOLTS,NUTS,ETC)

M.T.O. N° K196-305-MTO-0121-002 SH.6
KT DWG. N° K196-305-DW-0121-002

REV.	POS.N	QTY	DESCRIPTION	MATERIAL	REMARKS
A	O-301	–	DELETED	–	
C	O-302	4	SPACER 3mm THK. x 40mm x 198mm	UNS N08810	
A	O-303	1	SLEEVE 2mm THK. x ø= 210 L= 1169.5	UNS N08810	(DIA. BY VENDOR)
A	O-304	1	CERAMIC PAPER 1mm THK.		BY REFRACTORY VENDOR
A	O-305	1	200mm THK. KAOLITE 2800 OR EQUIVALENT		BY REFRACTORY VENDOR
B	O-306	12	ROD ø=9 L= 127	UNS N08810	SEE DETAIL "4"
B	–	–	DELETED	–	–
B	O-308	2	PLATE 10 THK 230x150	UNS N08811	

GENERAL NOTES FOR MATERIAL

M.T.O. N° K196-305-MTO-0121-002 SH.2
KT DWG. N° K196-305-DW-0121-002

a) FOR BENDS, ONLY IF MADE FROM BENT PIPES, THE THK. AFTER BENDING SHALL BE NOT LESS THAN THE SCHEDULE OR MINIMUM WALL INDICATED.
b) ALL MATERIAL CERTIFICATES SHALL BE IN ACCORDANCE WITH PERTINENT ASTM STD'S AND FURNISHED AS PER EN 10204-3.1
c) 100% P.M.I. REQUESTED ON ALLOY STEEL & S.S. FOR EACH COMPONENT (MIN. ONE TEST / EAT).
d) FULL COMPENSATION: TO BE CALCULATED FOR Pdes. = 3070 kPa(g), Tdes. = 890°C AND TAKING IN NO CONSIDERATION THE CONTRIBUTE OF THE RUN PIPE. THE FULL AREA REQUIRED FOR COMPENSATION SHALL BE PROVIDED BY WELDOLET.
e) WELDOLETS SHALL BE FORGED BLIND THE TUBE PREFABRICATOR MUST DRILL WELDOLETS AFTER EXECUTION OF HYDROTEST.
f) VENDOR SHALL PROVIDE MECHANICAL CALCULATIONS FOR FULL COMPENSATION COMPONENTS (TEE, CONE & WELDOLET) ACCORDING TO ASME B31.3.
g) THE MATERIAL SHALL HAVE GRAIN SIZE CORRISPONDING TO ASTM N° 5 OR COARSER AS SPECIFIED IN ASTM E112
h) THE PROPERTIES OF THE FINISHED TUBE SHALL CORRESPOND TO ASTM B407 ALLOY UNS N08811 SOLUTION ANNEALED MATERIAL

DESIGN DATA

PART		PIGTAILS	SUBHEADER	T-PIECE	CONE
FLUID		PROCESS GAS+STEAM	PROCESS GAS+STEAM	PROCESS GAS+STEAM	PROCESS GAS+STEAM
DESIGN-PRESSURE	kPa (g)	3070	3070	3070	3070
DESIGN-TEMP.	°C	890	890	890	(24)
CORROSION ALLOWANCE	mm	0	0	0	0
HYD.-TEST PRESS. (MANUFACTURER SHOP)	kPa (g)	N.A.	40100	40100	6550
HYD.-TEST PRESS. (SHOP, AFTER MODULARIZATION)	kPa (g)	14900			N.A.
PNEUMATIC TEST PRESS. (FIELD) (6)	kPa (g)	(6)			
EMPTY WEIGHT	kg	1300	500	250	130
OPERATION WEIGHT	kg	1300	500	250	130
WEIGHT FULL OF WATER	kg	1500	580	270	150
VOLUME	m^3	0.2	0.08	0.02	0.02
POST WELD HEAT TREATMENT		N.A.			
RADIOG. SHOP WELD PERC.	%	100			
RADIOG. FIELD WELD PERC.	%	100			
DYE PENETRANT	%	100			
PMI	%	100 (c)			
ULTRASONIC EXAMINATION	%	(8)			
MAGNETIC EXAMINATION	%	(8)			
DESIGN AS PER	KT MR/ASME B31.3				
CONSTRUCTION AS PER	KT MR/ASME B31.3				
INSPECTION BY	KT/CLIENT				

KT Kinetics Technology

PROPERTY OF KT S.P.A. TO BE RETURNED UPON REQUEST AND USED ONLY IN REFERENCE TO CONTRACT OR PROPOSAL OF THIS COMPANY. REPRODUCTION OF THIS PRINT OR UNAUTHORIZED USE OF PATENTED OR PATENTABLE FEATURES DISCLOSED HEREON IS PROHIBITED.

CAD CODE: K196-305-DW-0121-002
PROJ N.: K196

STEAM REFORMER PACKAGE, CHARGE HEATER AND COMBINED FEED HEATER
NATIONAL REFINERY LIMITED UPDATED PROJECT
KARACHI - PAKISTAN
OUTLET SYSTEM

Scale	Project	Unit	Doc. Code & Serial No.	Page	Rev.
1:33.3	K196	305	DW 0121 - 002	1 of 1	0

REV.	DATE	REVISION DESCRIPTION	PRP.	VRF.	APPR./AUTHOR.
D	2016 08-07	ISSUE FOR CONSTRUCTION	A.Bongo	S.ORLANDI	M. BRUNO G.DE IULIS
D	2015 23-11	ISSUE FOR APPROVAL	A.Bongo	S.ORLANDI	M. BRUNO G.DE IULIS
C	2015 24-09	ISSUE FOR APPROVAL	A.Bongo	S.ORLANDI	M. BRUNO G.DE IULIS
B	2015 15-07	ISSUE FOR APPROVAL	A.Bongo	S.ORLANDI	F.PROSPERI G.DE IULIS
A	2015 27-04	ISSUE FOR APPROVAL	STP	FP	FP/GDI

DISCI. | NAME | DATE | SQUAD CHECK